FACTORYLUX®

PATTRESS TYPE A

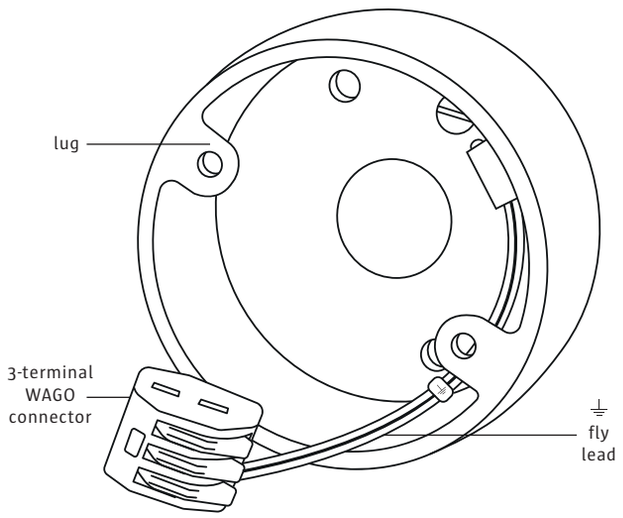

galvanised S283700 | black S282900

WHAT'S INCLUDED

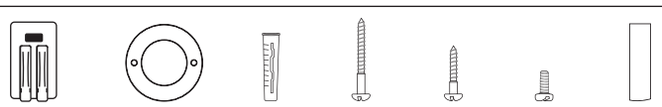

2x 2-terminal WAGO connector (L+N)	1x rubber gasket	2x plastic plug	2x medium screw	2x short screw	2x long brass screw	1x rubber tube*

* required for other Factorylux Modular installations

YOUR PRODUCT

Thank you for purchasing this Factorylux product. It has been designed and finished in the UK to give you many years of reliable service. Please read these user instructions carefully. All user instructions available to download at factorylux.com

WARNING

- Pattress must be installed by a competent person, in accordance with current wiring and building regs. Find an NICEIC registered contractor at factorylux.com
- For indoor use only
- Shut off power to the circuit before installation
- Always use fixings appropriate for the mounting surface (screws supplied may not be suitable)
- Bathroom installation by authorised contractor only

STAY UP TO DATE

We post regular design and product information via social media and our blog. You can also contact us via instant support, twitter or email hello@factorylux.com

FACTORYLUX®

USER INSTRUCTIONS

TOOLS REQUIRED

- Drill + 6mm masonry bit
- 6mm flat head screwdriver

INSTALLATION NOTES

- A pattress is a method of housing an electrical connection when it isn't possible within the light fitting. It is simpler, neater and safer than using a void behind a fixing surface (e.g. wall or ceiling)
- It is designed to sit behind a light fitting and be fixed to a solid horizontal or vertical surface, using appropriate fixings
- Most Factorylux light fittings are compatible with this pattress
- Installation requirements vary. Some of the fixtures and fittings supplied may not be required for your particular application

INSTALLATION (MASONRY SURFACE)

WARNING: Pattress to be earthed in accordance with current wiring regs

1. Drill 2 x 6mm holes x 30mm deep at 50.8mm centre spacings (note position of luminaire when positioning fixing holes)
2. Insert plastic plugs into holes
3. Use screwdriver and supplied medium screws to fix the pattress to the surface (alternatively, use supplied short screws only to fix pattress to a timber surface)
4. Locate rubber gasket between light fitting surface cup and pattress
5. Use supplied WAGO connectors to make L, N and ⏚ connections
   - Flip integrated orange lever up to open position
   - Insert exposed conductor to stopping point
   - Return lever to closed position
6. Secure light fitting surface cup to pattress lugs using supplied long brass screws

HANDLING & CLEANING

WARNING: Shut off power and allow to cool

- Wipe gently with a dry, soft, cotton cloth
- Cleaning products, scratching, abrasion, damp, oils, liquids etc may have a detrimental effect

TROUBLESHOOTING

In the event of failure, fault or damage shut off power and contact our technical department via factorylux.com

Mostly made in India. Finished in the UK
Revision 1602

Old Trouser Factory | Greenhill Industrial Estate | Mytholmroyd | Hebden Bridge | HX75QF

© Factorylux. All rights reserved. Factorylux is a registered trade mark.